Unit 4- Covering & Surrounding- 4.3 Surface Area and Volume Review

Ms. Barbalaco (Turquoise)

Name_____ Group_____ Date_____

What's our algorithm for...

$L \times W \times h$

Surface Area

① Find the dimensions
② Find the area of each lateral face.
③ Add up all six areas of each lateral face

Volume

① Find the dimensions
② Multiply the length by the width by the height

Surface Area Formula: $SA = 2(l \cdot w + w \cdot h + l \cdot h)$

Volume Formula: $V = l \cdot w \cdot h$

Let's Practice:

Find the surface area of each rectangular prism.

$\square = 1\ cm^2$

1)

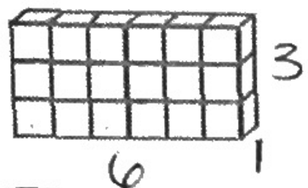

$6 \times 1 \times 3$

$SA = 2(6 \cdot 1 + 1 \cdot 3 + 6 \cdot 3)$
$= 2(6 + 3 + 18)$
$= 2(27)$
$= \boxed{54\ cm^3}$

2)

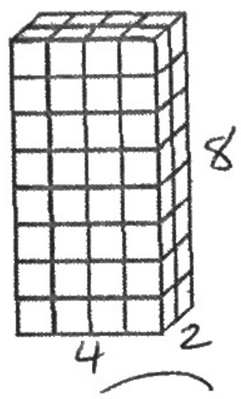

$4 \times 2 \times 8$

$SA = 2(4 \cdot 2 + 2 \cdot 8 + 4 \cdot 8)$
$= 2(8 + 16 + 32)$
$= 2(56)$
$= \boxed{112\ cm^2}$

3)

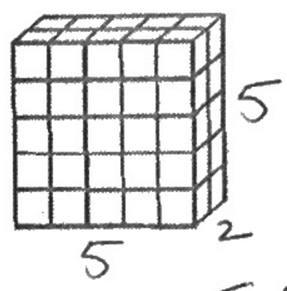

$5 \times 2 \times 5$

$SA = 2(5 \cdot 2 + 2 \cdot 5 + 5 \cdot 5)$
$= 2(10 + 10 + 25)$
$= 2(45)$
$= \boxed{90\ cm^3}$

4)

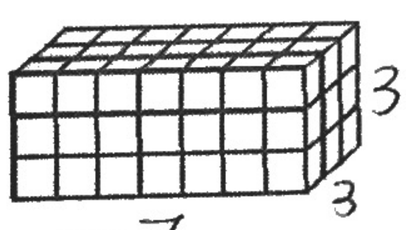

$7 \times 3 \times 3$

$SA = 2(7 \cdot 3 + 3 \cdot 3 + 7 \cdot 3)$
$= 2(21 + 9 + 21)$
$= 2(51)$
$= 102\ cm^3$

5)

$2 \times 2 \times 10$

$SA = 2(2 \cdot 2 + 2 \cdot 10 + 2 \cdot 10)$
$= 2(4 + 20 + 20)$
$= 2(44)$
$= \boxed{88\ cm^2}$

6)

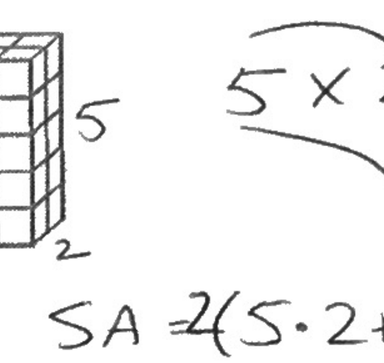

$6 \times 2 \times 6$

$SA = 2(6 \cdot 2 + 2 \cdot 6 + 6 \cdot 6)$
$= 2(12 + 12 + 36)$
$= 2(60)$
$= \boxed{120\ cm^2}$

7)

$8 \times 2 \times 2$

$SA = 2(8 \cdot 2 + 2 \cdot 2 + 8 \cdot 2)$
$= 2(16 + 4 + 16)$
$= 2(36)$
$= \boxed{72\ cm^2}$

8)

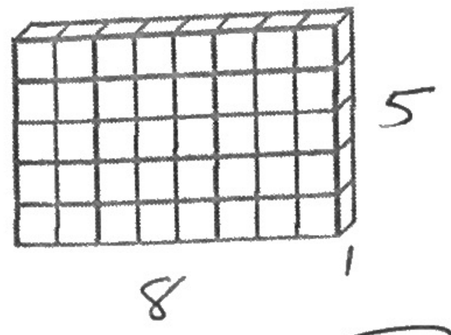

$8 \times 1 \times 5$

$SA = 2(8 \cdot 1 + 1 \cdot 5 + 8 \cdot 5)$
$= 2(8 + 5 + 40)$
$= 2(53)$
$= \boxed{106\ cm^2}$

9)

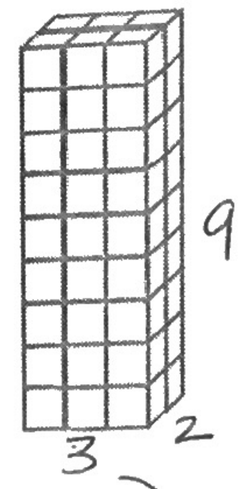

$3 \times 2 \times 9$

$SA = 2(3 \cdot 2 + 2 \cdot 9 + 3 \cdot 9)$
$= 2(6 + 18 + 27)$
$= 2(51)$
$= \boxed{102\ cm^2}$

Volume

Count the cubes and find the volume of each rectangular prism.

1)

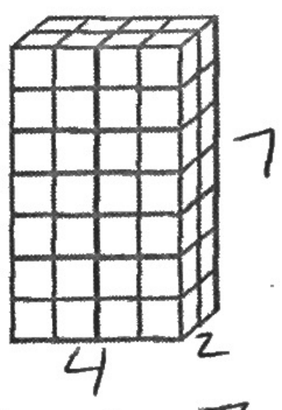

$V = 4 \cdot 2 \cdot 7$
$= 8 \cdot 7$
$= \boxed{56\ cm^3}$

2)

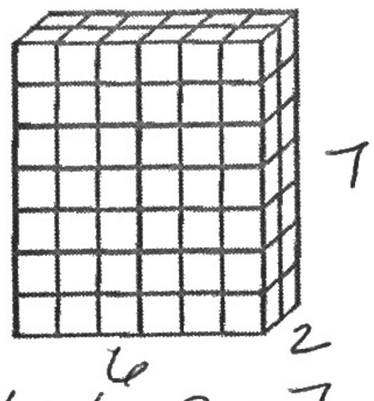

$V = 6 \cdot 2 \cdot 7$
$= 12 \cdot 7$
$= \boxed{84\ cm^3}$

3)

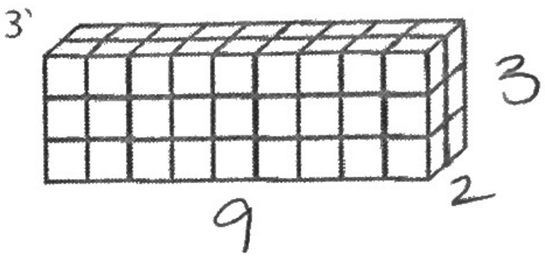

$V = 9 \cdot 2 \cdot 3$
$= 18 \cdot 3$
$= \boxed{54\ cm^3}$

4)

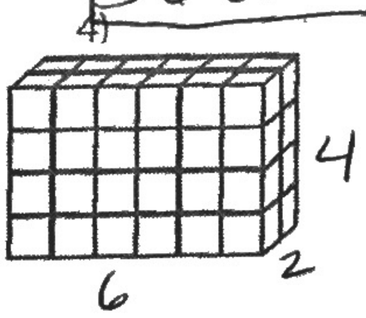

$V = 6 \cdot 2 \cdot 4$
$= 12 \cdot 4$
$= \boxed{48\ cm^3}$

5)

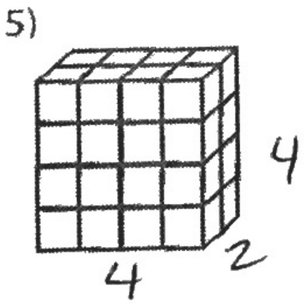

$V = 4 \cdot 2 \cdot 4$
$V = 8 \cdot 4$
$V = \boxed{32\ cm^3}$

6)

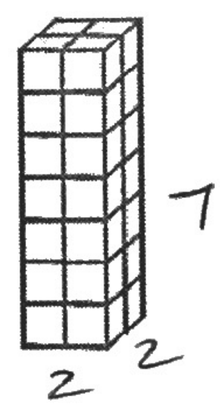

$V = 2 \cdot 2 \cdot 7$
$V = 4 \cdot 7$
$V = \boxed{28\ cm^3}$

7)

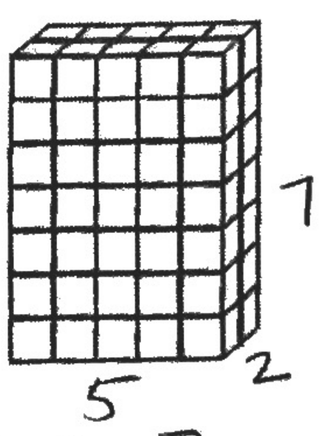

$V = 5 \cdot 2 \cdot 7$
$= 10 \cdot 7$
$= \boxed{70\ cm^3}$

8)

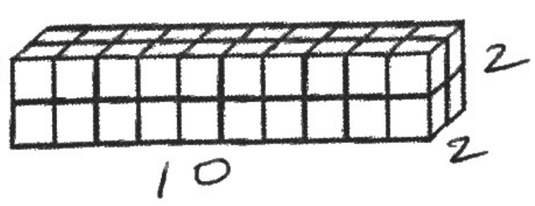

$V = 10 \cdot 2 \cdot 2$
$= 20 \cdot 2$
$= \boxed{40\ cm^3}$

9)

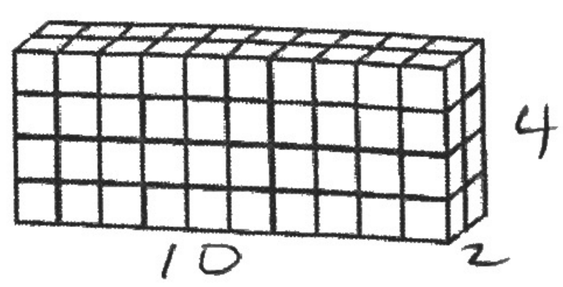

$V = 10 \cdot 2 \cdot 4$
$= 20 \cdot 4$
$= \boxed{80\ cm^3}$

Ms. Barbalaco (Turquoise)

Unit 4- Covering & Surrounding- Review #1

Name_____ Group_____ Date_____

A. Word Problems:

1) Finn used cardboard to make mats for his photos. The photos were 3 inches by 4 inches. The mats were different sizes and different shapes. The mats are shaded in the diagrams below.

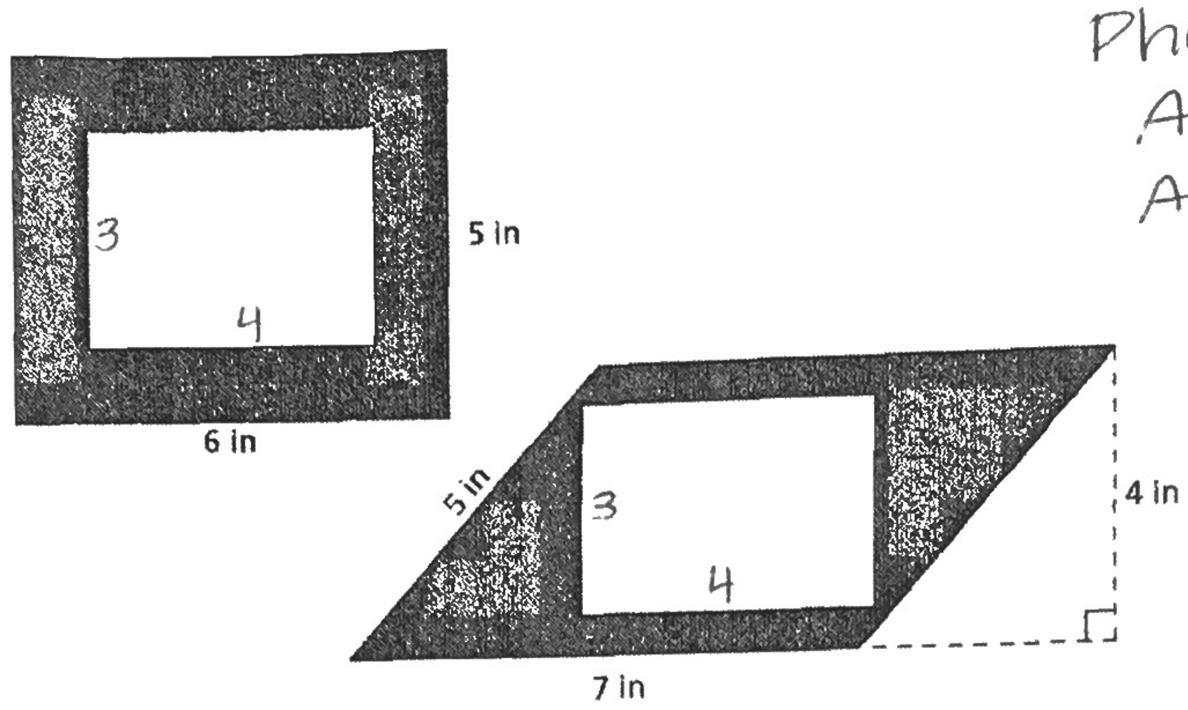

Photos:
$A = 3 \cdot 4$
$A = 12in^2$

What is Ms B's favorite movie to watch?

Ms. B's favorite movie to watch is Casablanca while she eats popcorn & sourpatch watermelon candy.

a. How much cardboard (in square inches) is showing in the rectangular mat?

$A = 5 \cdot 6$
$A = 30in^2$

$30in^2 - 12in^2 = \boxed{18in^2}$

b. How much cardboard (in square inches) is showing in the non-rectangular mat?

$A = b \cdot h$
$A = 7 \cdot 4$
$= 28in^2$

$28in^2 - 12in^2 = \boxed{16in^2}$

2) The Volume of a rectangular Prism is $\frac{1}{9}cm^3$. If the length is $\frac{1}{3}cm$ and the height is $\frac{2}{3}cm$, what is the width?

$V = \frac{1}{9}cm^3$
$L = \frac{1}{3}cm$
$h = \frac{2}{3}cm$
$w = ?$

$V = l \cdot w \cdot h$
$\frac{1}{9} = \frac{1}{3} \cdot \frac{2}{3} \cdot h$
$\frac{1}{9} = \frac{2}{9} \cdot h$

fact family!

$\frac{1}{9} \div \frac{2}{9} = h$
$\frac{1}{9} \cdot \frac{9}{2} = h$
$\frac{9}{18} = h$
$\boxed{\frac{1}{2} = h}$

3) Find the volume of a cube if the area of one lateral face is $36cm^2$.

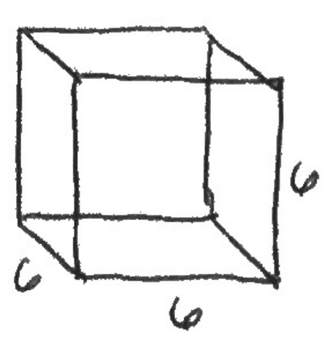

$A = 36cm^2$
$L = ? = 6$
$W = ? = 6$
$L = W$

$\boxed{h = 6}$

$V = l \cdot w \cdot h$
$= 6 \cdot 6 \cdot 6$
$= 36 \cdot 6$
$= \boxed{216cm^3}$

4) Find the volume of a rectangular prism that has a base with an area of $4\frac{2}{3}\,in^2$ & a height of $\frac{3}{4}\,in$.

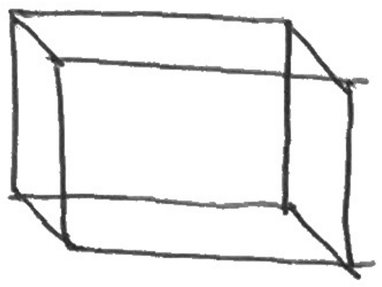

base's area $= l \cdot w$
$= 4\frac{2}{3}\,in^2$

$V = (l \cdot w) \cdot h$
$= 4\frac{2}{3} \cdot \frac{3}{4}$
$= \frac{14}{3} \cdot \frac{3}{4} = \frac{42}{12} = 3\frac{6}{12} =$
$V = \boxed{3\frac{1}{2}\,in^3}$

For Questions 5- 8: The Apple Theater concession sells two sizes of popcorn- a micro box and a jumbo box. Use the information below the questions.

5a) How many square inches are needed to make the micro box?

$5 \times 1 \times 3$
$SA = 2(5 \cdot 1 + 1 \cdot 3 + 5 \cdot 3)$
$= 2(5 + 3 + 15)$
$= 2(23)$
$= \boxed{46\,in^2}$

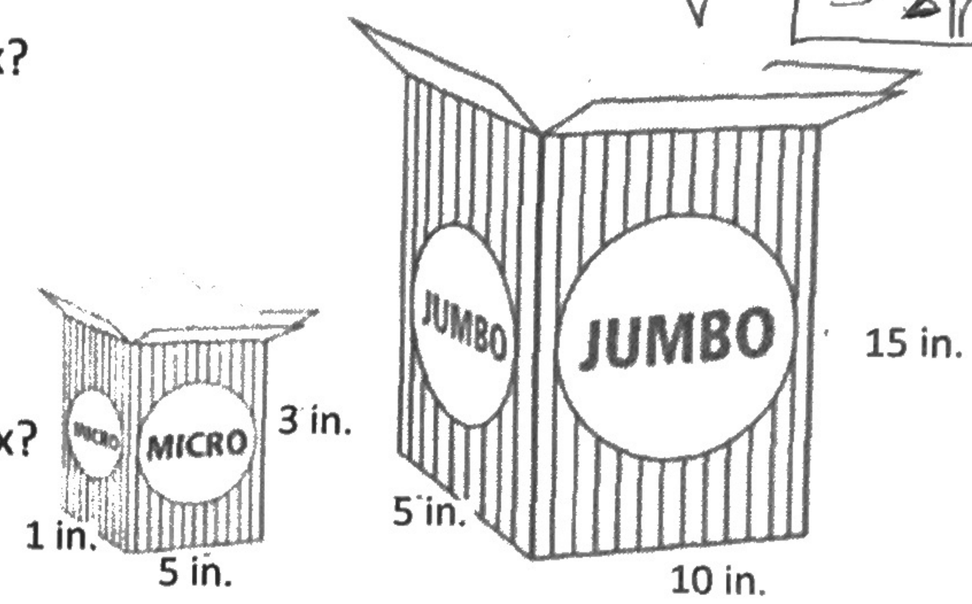

5b) How many square inches are needed to make the jumbo box?

$10 \times 5 \times 15$
$SA = 2(10 \cdot 5 + 5 \cdot 15 + 10 \cdot 15)$
$= 2(50 + 75 + 150)$
$= 2(275)$
$= \boxed{550\,in^2}$

6) What is the amount of cardboard needed to make the jumbo box without a top (HINT: one face is missing)?

Total Surface Area − TOP Area
TOP Area $= 5 \cdot 10$
$= 50\,in^2$
$550\,in^2 - 50\,in^2 = \boxed{500\,in^2}$

7) What is the volume of the micro box?

$V = 5 \cdot 1 \cdot 3 = \boxed{15\,in^3}$

8) What is the volume of the jumbo box?

$V = 10 \cdot 5 \cdot 15 = \boxed{750\,in^3}$

9) Find the surface area and volume of the net below:

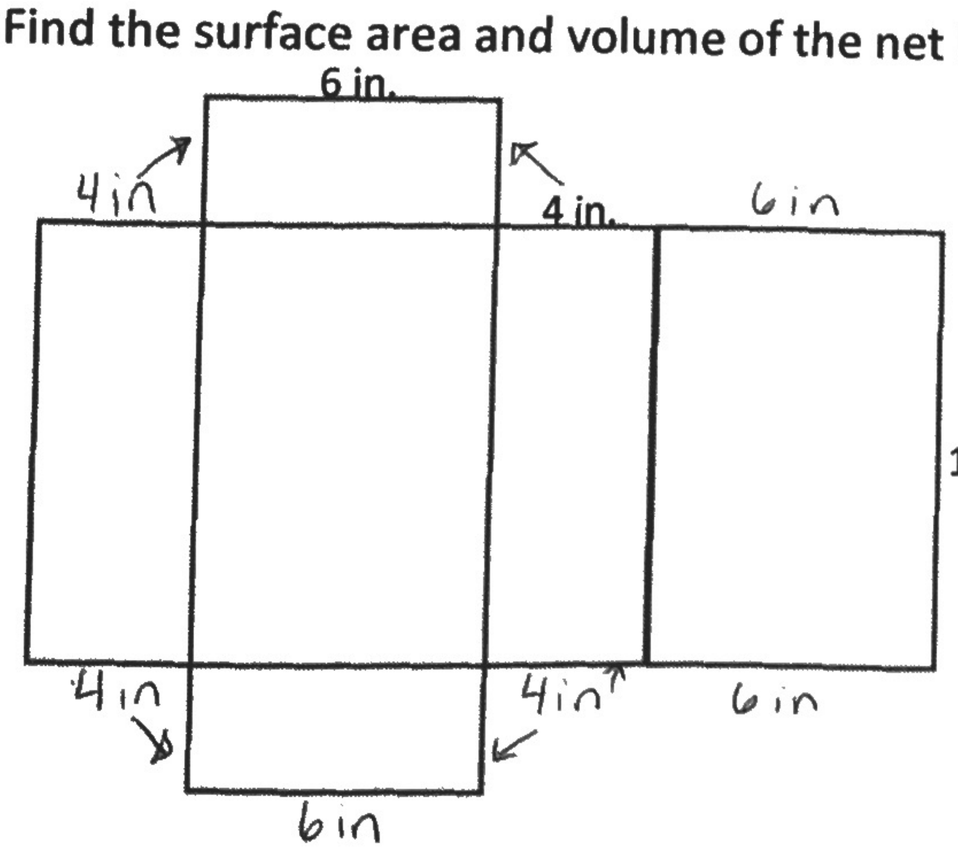

$12 \times 6 \times 4$
$SA = 2(12 \cdot 6 + 6 \cdot 4 + 12 \cdot 4)$
$= 2(72 + 24 + 48)$
$= 2(144)$
$SA = \boxed{288\,in^2}$

$V = 12 \cdot 6 \cdot 4$
$= 72 \cdot 4$
$\boxed{V = 288\,in^3}$

10) What kind of prism does the net form?

The net forms a rectangular prism

Unit 4- Covering & Surrounding- Review #2 Ms. Barbalaco (Turquoise)

Name_____ Group_____ Date_____

Study Guide

-Area and Perimeter of:
- **Rectangles**
- **Parallelograms**
- **Triangles**

-Coordinate grids

-Characteristics of:
- **Rectangles**
- **Parallelograms**
- **Triangles**
- **Rectangular Prisms**

-Surface Area and Volume of Rectangular Prisms

A. Let's Practice Rectangles:

Formula of... **Area=** $l \cdot w$ **Perimeter=** $s+s+s+s$ OR $= l+l+w+w$

Find the Area and either the length or width.

1) Perimeter = 28 in

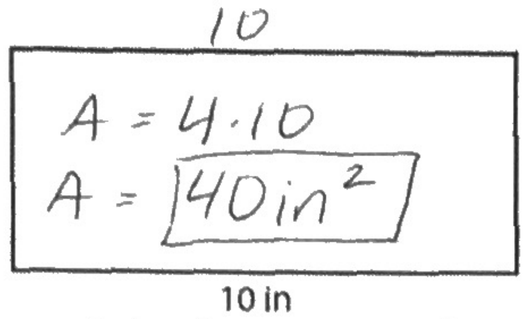

$A = 4 \cdot 10$
$A = 40in^2$

$28 - 20 = 8$

$P = s+s+s+s$
$28 = 10+10+s+s$
$28 = 20+s+s$
$s+s = 8$
$8 \div 2 = 4$
$w = 4in$

2) Perimeter = 14 mm

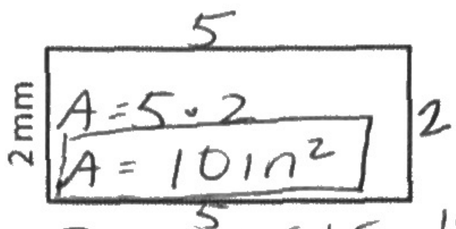

$A = 5 \cdot 2$
$A = 10in^2$

$14 - 4 = 10$

$P = s+s+s+s$
$14 = 2+2+s+s$
$14 = 4+s+s$
$s+s = 10$
$10 \div 2 = 5$
$l = 5in$

3) Perimeter = 22 ft

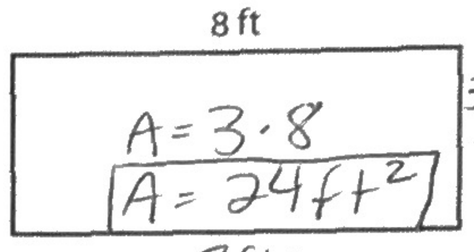

$A = 3 \cdot 8$
$A = 24ft^2$

$322 - 16 = 6$

$P = s+s+s+s$
$22 = 8+8+s+s$
$22 = 16+s+s$
$s+s = 6$
$6 \div 2 = 3$
$w = 3in$

Find the Area and Perimeter.

4)

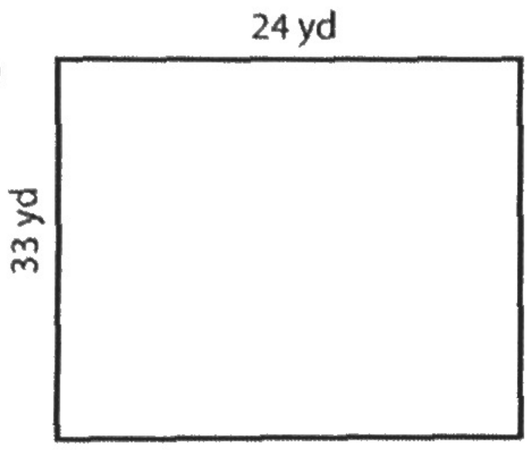

$33 \cdot 24$
132
$+66$
792

$A = 33 \cdot 24$
$A = 792yd^2$

$P = 33+33+24+24$
$P = 66+48$
$P = 114yd$

5)

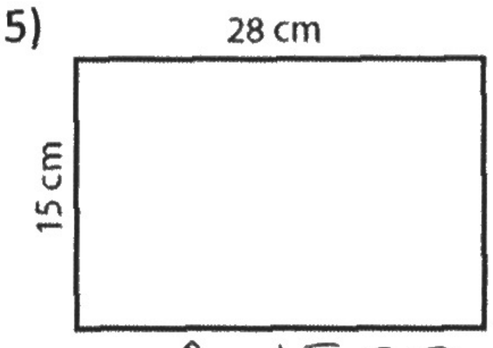

$A = 15 \cdot 28$
$A = 420cm^2$

$P = 15+15+28+28$
$P = 30+56$
$P = 86cm$

6)

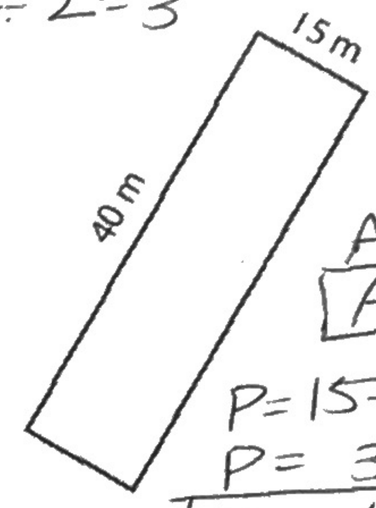

$28 \cdot 15 = 140 + 28 = 420$

$15 \cdot 40 = 600$

$A = 40 \cdot 15$
$A = 600m^2$

$P = 15+15+40+40$
$P = 30+80$
$P = 110m$

B. Let's Practice Triangles:

Formula of... **Area=** $\frac{1}{2} \cdot b \cdot h$ OR $b \cdot h \div 2$ **Perimeter=** $s+s+s$

Find the area.

7)

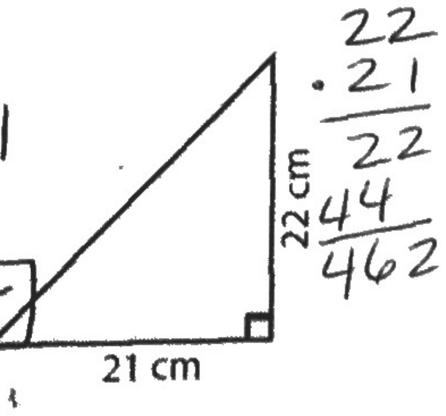

$22 \cdot 21 = 22 + 44 = 462$

$A = \frac{1}{2} \cdot 22 \cdot 21$
$A = \frac{1}{2} \cdot 462$
$A = 231cm^2$

OR

$A = 22 \cdot 21 \div 2$
$A = 462 \div 2$
$A = 231cm^2$

8)

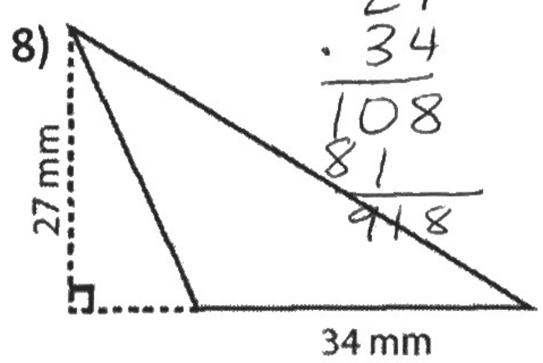

$27 \cdot 34 = 108 + 81 = 918$

$A = \frac{1}{2} \cdot 27 \cdot 34$
$A = \frac{1}{2} \cdot 918$
$A = 459mm^2$

OR

$A = 27 \cdot 34 \div 2$
$A = 918 \div 2$
$A = 459mm^2$

9)

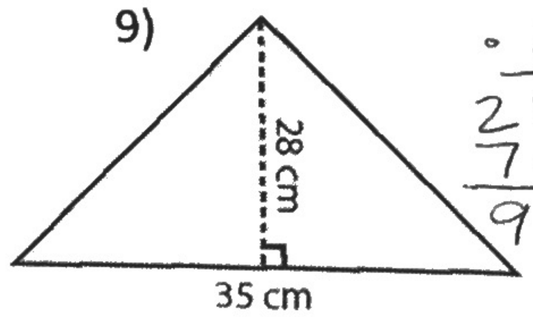

$35 \cdot 28 = 280 + 70 = 980$

$A = \frac{1}{2} \cdot 35 \cdot 28$
$A = \frac{1}{2} \cdot 980$
$A = 490cm^2$

OR

$A = 35 \cdot 28 \div 2$
$A = 980 \div 2$
$A = 490cm^2$

C. Let's Practice Parallelograms:

Formula of... **Area** = b • h **Perimeter** = s + s + s + s

Find the area and perimeter.

10)

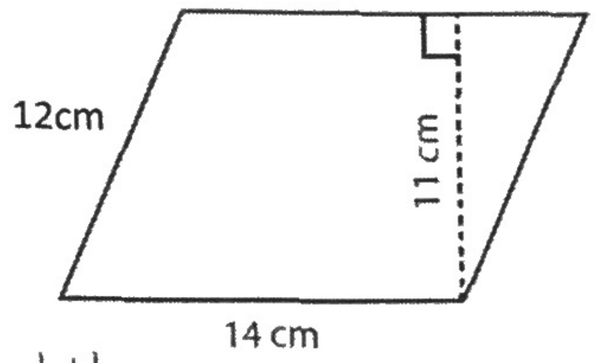

$$\begin{array}{r} 14 \\ \cdot 11 \\ \hline 14 \\ 14 \\ \hline 154 \end{array}$$

A = 11 • 14

$\boxed{A = 154cm^2}$

P = 12 + 12 + 14 + 14

P = 24 + 28

$\boxed{P = 52cm}$

11)

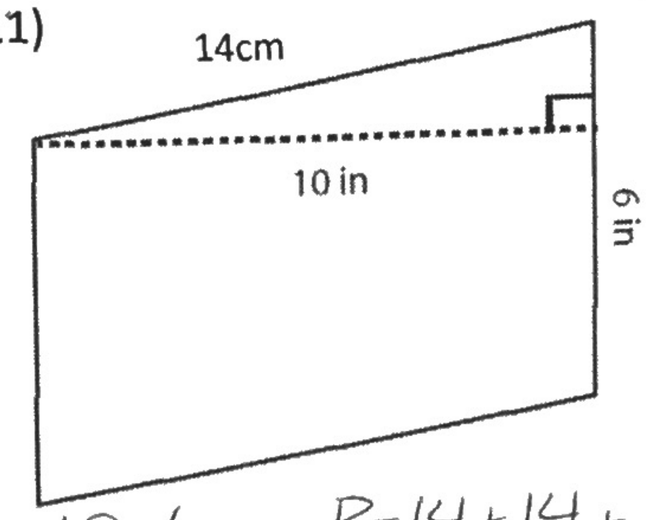

A = 10 • 6

$\boxed{A = 60in^2}$

P = 14 + 14 + 6 + 6

P = 28 + 12

$\boxed{P = 40in}$

12)

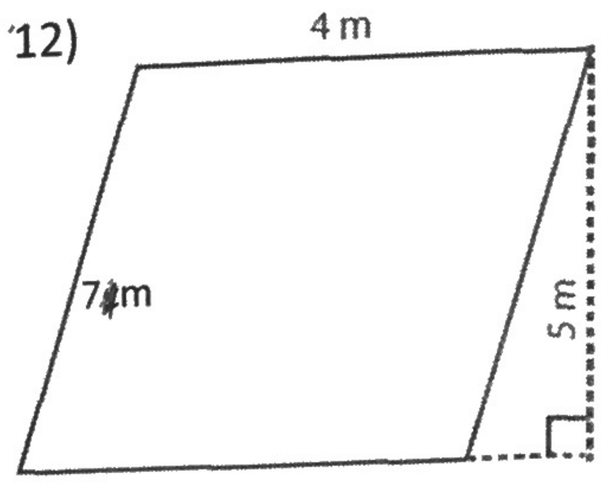

A = 5 • 4

$\boxed{A = 20m^2}$

P = 7 + 7 + 4 + 4

P = 14 + 8

$\boxed{P = 22m}$

D. Plot the coordinates given, find the area and identify the shape of the following:

13) A B C D

(3, 3), (3, 6), (8, 6), (8, 3)

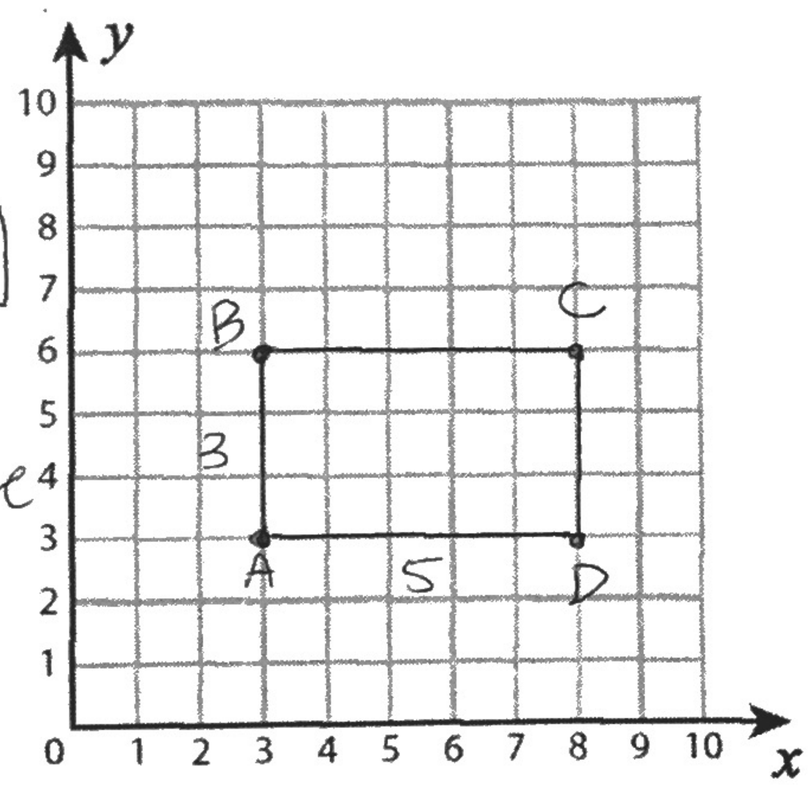

Area

A = 3 • 5

$\boxed{A = 15u^2}$

Shape

Rectangle

14) A B C D

(3, 2), (3, 9), (10, 9), (10, 2)

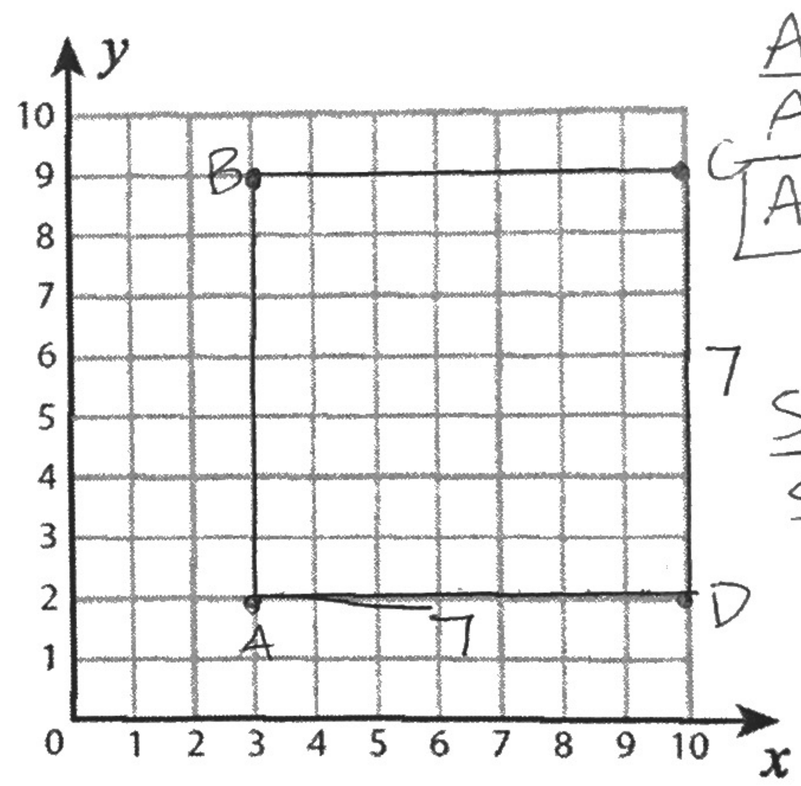

Area

A = 7 • 7

$\boxed{A = 49u^2}$

Shape

Square

15) A B C

(5, 3), (5, 7), (10, 3)

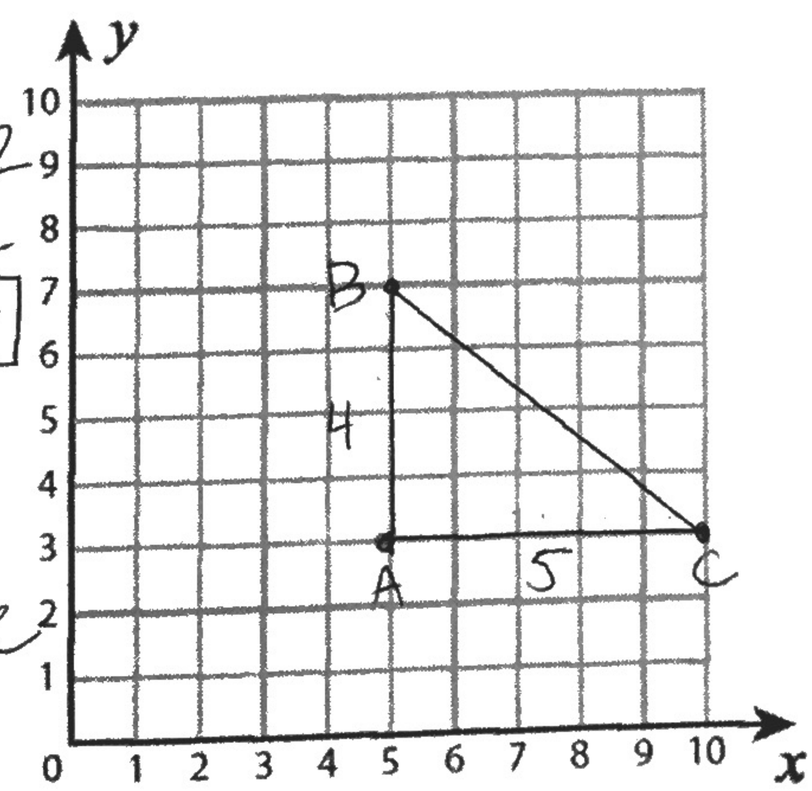

Area

A = 5 • 4 ÷ 2

A = 20 ÷ 2

$\boxed{A = 10u^2}$

Shape

Right Triangle

16) A B C D

(3, 4), (7, 4), (8, 2), (4, 2)

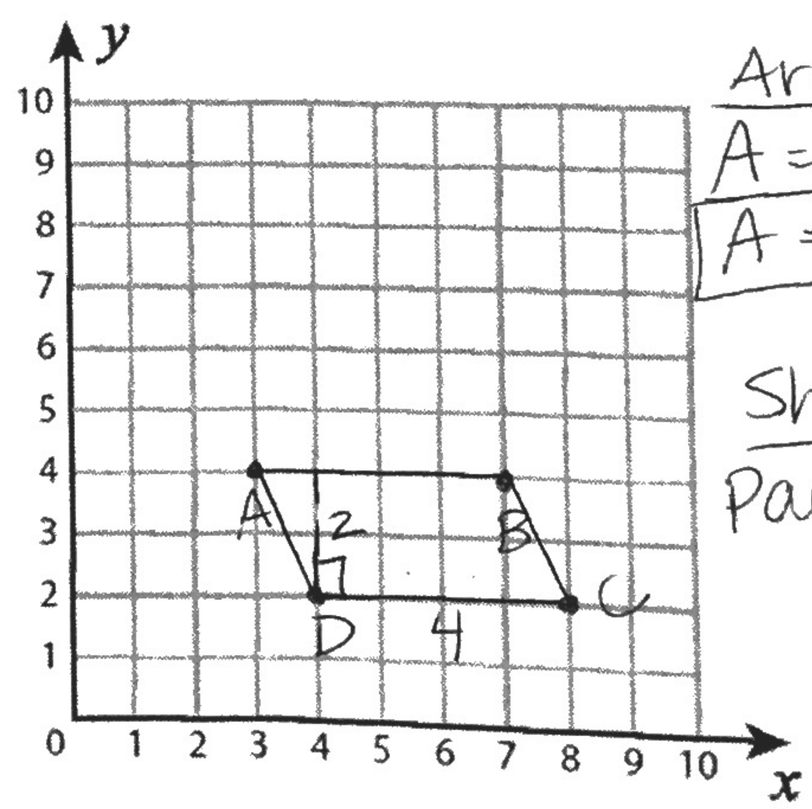

Area

A = 2 • 4

$\boxed{A = 8u^2}$

Shape

Parallelogram